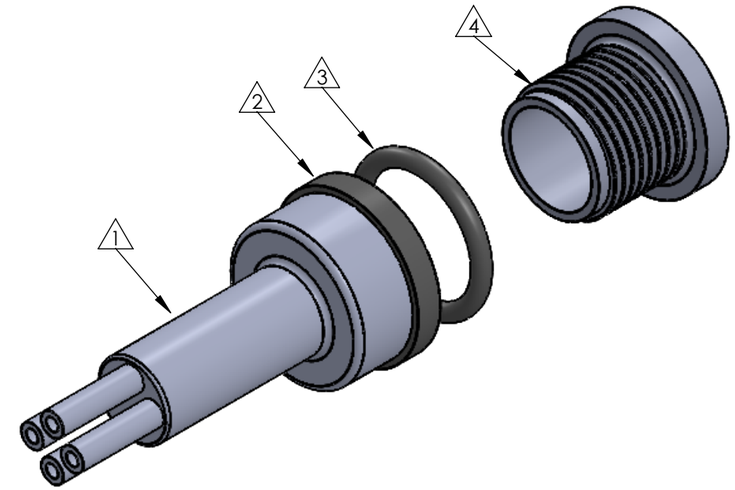

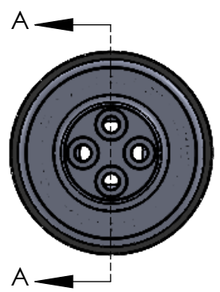

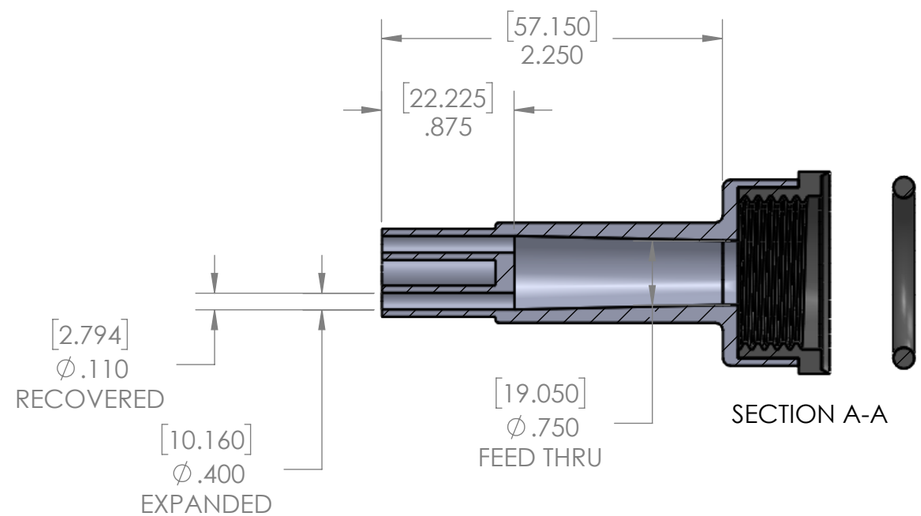

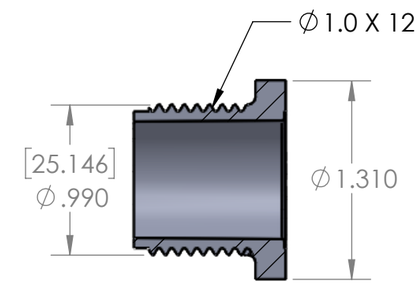

ITEM	PART DESCRIPTION	PART NO.	MATERIAL
1	Heat-shrinkable boot	NUBB4-1	HS 3123
2	Body	S-2XB	Nylon
3	O-ring	S-2XO	Buna
4	Nut	S-2XN	Nylon
5	Adhesive	A-010	Hotmelt ADH
6			

Nu-Tech

UNLESS OTHERWISE SPECIFIED:

DIMENSIONS ARE IN INCHES
TOLERANCES:
FRACTIONAL ±1/32
THREE PLACE DECIMAL ± 0.030

DO NOT SCALE DRAWING

DRAWN: SS DATE: 5/21/2021

PART NO. 2X-NUS-4A

DWG. NO.

WEIGHT: REV

SCALE: 1:1 SHEET 1 OF 1